Manual

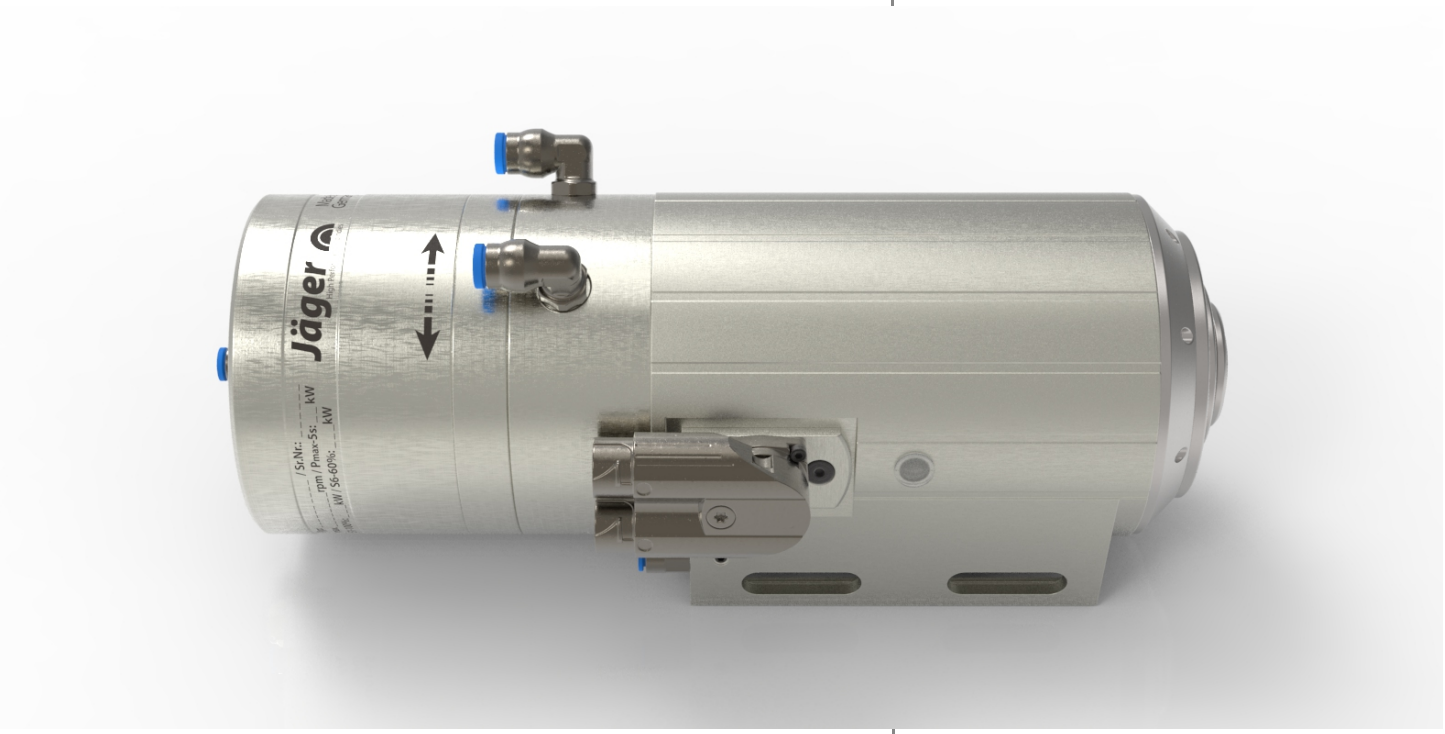

Chopper 2300-40 HSK S19

High Frequency Spindle

Pneumatic taper change

Identification of HF spindle

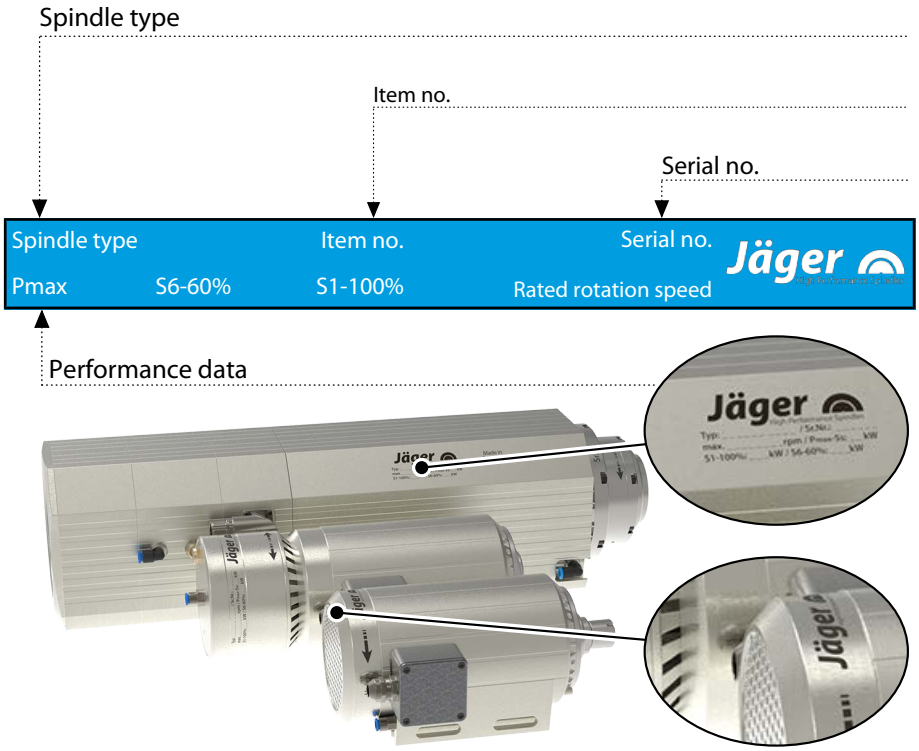

As we always ensure that our HF spindles are at the cutting edge of technological development, we reserve the right to make technical modifications and variations from the exact design described in the manual.

The text in this manual has been compiled with the utmost care. However, **Nakanishi Jaeger GmbH** cannot assume any legal responsibility or liability of any kind for incorrect information and any consequences thereof.

Translations and reproductions – including of extracts – are prohibited without the express written approval o **Nakanishi Jaeger GmbH**.

Contents:

Translation of the original manual

1 Preliminary information 5
1.1 Purpose of the manual 5
1.2 Explanation of symbols used 5

2 Transport and packaging 6
2.1 Scope of supply of HF spindle 6
2.1.1 Optional accessories 6
2.1.2 Documentation supplied 6
2.2 Packaging of HF spindle 6

3 Designated use 7
3.1 Permissible types of machining 7
3.2 Permissible materials 7

4 Safety instructions 8
4.1 Safe working 9
4.2 Shutdown of HF spindle 10
4.3 Installation and maintenance 10
4.4 Modification and repair 10
4.5 Improper operation 10

5 Technical description 11
5.1 Connections of HF spindle 11
5.2 Electrical connection 12
5.3 Cooling 12
5.4 Sealing air 12
5.5 Taper cleaning 13
5.6 Pneumatic tool change 13
5.7 Cylinder vent 13

6 Technical Specifications 14
6.1 Dimensions 15
6.2 Technical data sheet (KL 3514, AC motor) 16
6.2.1 Performance Diagram 17
6.3 Wiring diagram 18
6.4 Motor protection PTC 130°C 20
6.5 Tool change monitoring 20
6.6 Speed sensor (digital differential magneto resistor) 21
6.7 Air-borne noise emissions 21

7 Operating location 22

8 Installation 23
8.1 Installing the HF spindle 23
8.2 Diameter of media supply line 24
8.3 Cooling water 24
8.3.1 Quality of cooling water 24
8.3.2 Setting the cooling 24
8.4 Compressed air 25
8.4.1 Air purity classes (ISO 8573-1) 25
8.4.2 Setting the sealing air 25
8.4.3 Setting values 26

9 Commissioning 26
9.1 Running-in schedule 26
9.2 Daily start-up 27
9.3 Shutdown signal 27
9.4 Commissioning after storage 27

10 Tool change 28
10.1 Clockwise and counter-clockwise 28
10.2 Pneumatic taper change 29
10.2.1 Automatic hollow shank taper tool clamp 29
10.3 Tool changing station (optional accessory) 30
10.3.1 pneumatic taper change 30
10.3.2 Installing the changing station 30
10.3.3 Maintenance 30

11 Tools for high speed cutting 31

12 Maintenance 32
12.1 Ball bearings 32
12.2 Daily cleaning 32
12.2.1 Before commencing work 32
12.2.2 With every tool change 33
12.2.3 Every time the clamping device is changed 33
12.3 In the case of storage 33
12.4 Weekly maintenance 33
12.5 Monthly maintenance 34
12.6 Long periods of storage 34
12.7 Maximum storage time 34

13 Dismantling 35
13.1 Disposal and environmental protection 35

14 Service and repairs 35
14.1 Service partners 35
14.2 Malfunctions 36

Contents:

Translation of the original manual

15 Declaration of Incorporation 39

1 Preliminary information

The high frequency spindle (HF spindle) is a high quality precision tool for high speed machining.

1.1 Purpose of the manual

The manual is an important component of the HF spindle.

- Store the manual carefully.
- Make the manual available to all persons who work with the HF spindle.
- Read the documentation supplied in full.
- Before carrying out any work, read the corresponding section of the manual carefully again.

1.2 Explanation of symbols used

To enable quick classification of information, this manual uses visual aids in the form of symbols and text markings.

Notes are marked with a signal word and a colored box:

DANGER

Dangerous situation!

Results in serious injury or death.

▶ Measure to avert the danger.

WARNING

Dangerous situation!

May result in serious injury or death.

▶ Measure to avert the danger.

CAUTION

Dangerous situation!

May result in minor to moderate injury.

▶ Measure to avert the danger.

Note

May result in material damage. This warning symbol is not a warning for personal injury.

Tip

Tips indicate useful information for users.

2 Transport and packaging

Avoid strong vibrations or impacts during transportation, as these could damage the ball bearings of the HF spindle.

- Any damage reduces the accuracy of the HF spindle.
- Any damage restricts the functionality of the HF spindle.
- Any damage shortens the service life of the HF spindle.

2.1 Scope of supply of HF spindle

The following parts are supplied with the HF spindle:

- ❑ High Frequency Spindle
- ❑ Transport packaging
- Check the high frequency spindle for completeness upon delivery.

2.1.1 Optional accessories

Available on request:

- ❑ Frequency converter
- ❑ Chiller
- ❑ Tool taper
- ❑ Felt cleaning taper
- ❑ Collet grease
- ❑ Further accessories on request.

Only approved accessories have been tested for operational safety and functionality.

- Do not use any other accessories – this may invalidate any warranty claims and compensation claims for damages.

2.1.2 Documentation supplied

The documents listed below are supplied with the HF spindle:

- ❑ Manual
- ❑ The declaration of incorporation is part of the manual.
- ❑ Inspection protocol
- Check that the documentation supplied is complete when the spindle is delivered. If necessary, request a new copy.

2.2 Packaging of HF spindle

All transport packaging materials can be recycled in appropriate disposal facilities.

3 Designated use

The HF spindle is an “incomplete machine” in accordance with the Machinery Directive and cannot perform any function independently. The HF spindle can only be operated in conjunction with a machine tool and a frequency converter.

3.1 Permissible types of machining

The HF spindle has been developed only for the following types of machining.

- ❑ Cutting
- ❑ Drilling
- ❑ Engraving
- ❑ Grinding
- ➲ Contact **Nakanishi Jaeger GmbH** if other types of machining are required.

3.2 Permissible materials

The HF spindle has been developed only for the following materials.

- ❑ Metals (such as alloys, cast metals etc.)
- ❑ Sintered materials
- ❑ Plastics
- ❑ Wood
- ❑ Graphite
- ❑ Stone (marble, etc.)
- ❑ Paper and cardboard
- ❑ Circuit boards
- ❑ Glass and ceramic
- ➲ Contact **Nakanishi Jaeger GmbH** if other materials are to be machined.

4 Safety instructions

The high frequency spindle is a state of the art product and is safe to operate.

However, the HF spindle may pose a risk in the following cases:

- ❑ If it is installed by untrained personnel.
- ❑ If it is used incorrectly.
- ❑ If it is not used in accordance with its intended use.

The high frequency spindle may only be installed, commissioned, and maintained by specialist personnel.

Definition: Specialist personnel are persons who are familiar with the assembly, installation, commissioning, and operation of the product and have the relevant qualifications for their area of activity. The operator must closely control the responsibility, training, and monitoring of these personnel.

DANGER: Due to explosion.

HF spindles are not approved for use in areas at risk of explosion. Use in such areas may result in explosions.

▶ Do not use the HF spindle in potentially explosive atmospheres.

DANGER: Due to flying parts.

The HF spindle operates at high speeds and may therefore be flung away by these.

▶ Operate the HF spindle only if it is installed in the machine or system in a fixed manner.

Note: Adhere to the limit values.

▶ Observe the limit values specified in the technical data.

Note: Take account of the machine.

▶ Observe the manual of the machine in which the HF spindle is installed.

▶ Observe all safety instructions specified by the machine manufacturer.

▶ Ensure that the machine does not cause any hazards (e.g. uncontrolled movements). Do not install the HF spindle in the machine until this has been done.

Note. Do not damage the HF spindle.

▶ Any damage reduces the accuracy of the HF spindle.

▶ Any damage restricts the functionality of the HF spindle.

▶ Any damage shortens the service life of the HF spindle.

4.1 Safe working

Observe all safety instructions set out in the manual, the applicable national accident prevention regulations, and the valid company work, operation, and safety guidelines.

DANGER: Due to flying parts.

Tools that are not clamped correctly will be flung away by the centrifugal forces that occur during machining.

- ▶ Use the full clamping depth of the clamping system.
- ▶ Clamp the tool securely.

DANGER: Due to flying parts.

If the wrong rotational direction is used, the clamping system releases and the tool is flung away.

- ▶ It is essential to adhere to the rotational direction of the HF spindle.

WARNING: Risk of injury due to flying parts.

The HF spindle operates at high speeds which may cause chips to fly out with great force.

- ▶ Never remove the protective devices of the machine or system.
- ▶ Always wear protective goggles during work.

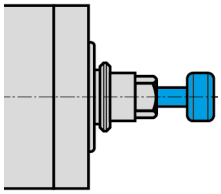

Example of design: Inserting the shank

Note: Ensure functionality.

- ▶ Never operate the HF spindle without a clamped tool shank.

If no tool shank is clamped:

- ❑ The clamping system is damaged by the centrifugal forces.
- ❑ The clamping system is shifted.
- ❑ The balance of the HF spindle is affected.
- ❑ The bearing is damaged.

➲ Take the relevant measures to protect against splashes and spray according to the type of machining, the type of material being machined, and the type of tool selected.

↳ Observe the manual of the machine in which the HF spindle is installed.

➲ Obtain the maximum circumferential speeds of the tools used from the tool supplier.

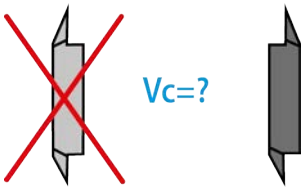

Single-point tools are not suitable for high speed cutting.

If they are required for production reasons:

➲ Only use a balanced tool.

↳ DIN ISO 1940

↳ Balance grade 2,5

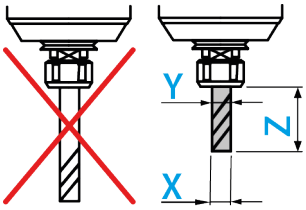

The tool cutting diameter (X) must not be greater than the maximum clamping range (Y).

- Always clamp the tool so that it is as short as possible.
- Keep the dimension (Z) small.
  - (Y) See section: Technical Specifications [▸ 14].

4.2 Shutdown of HF spindle

The procedure for shutting down the high frequency spindle for installation and maintenance work is as follows:

- Completely disconnect the power supply.
- Completely disconnect the media supply (air and liquid).
- Make sure that the shaft of the HF spindle has come to an absolute standstill.

If the HF spindle is being shut down to be cleaned:

- Reconnect only the sealing air.

Tip: Forward the data to the controller.

▶ Use the option on the frequency converter of detecting the shutdown signal from the shaft and forwarding this to the machine controller for evaluation.

4.3 Installation and maintenance

- Carry out installation, cleaning, and maintenance work only after shutting down the HF spindle and after the shaft has come to a standstill.
- Install all safety and protective devices of the machine immediately after completing work.

4.4 Modification and repair

Modifications or alterations to the HF spindle are only permitted after prior consultation with **Nakanishi Jaeger GmbH**.

Only the service partners listed in the “Service and repair [▸ 35]” section are authorized to open and repair the HF spindle.

Only approved accessories have been tested for operational safety and functionality.

4.5 Improper operation

The high frequency spindle is only safe to operate for its designated use.

- Observe the safety instructions in all sections of the manual to prevent hazards to persons, the environment, the machine, or the HF spindle itself.

Failure to observe the safety instructions may invalidate any warranty claims and compensation claims for damages.

5 Technical description

5.1 Connections of HF spindle

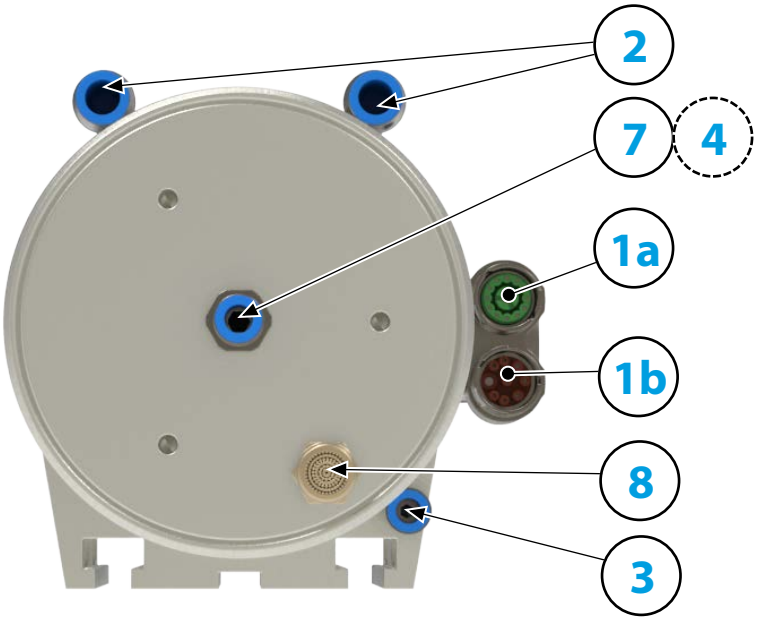

1a	Electrical connection for: motor phases	
1b	Electrical connection for: Tool taper monitoring	
2	Cooling water	G 1/8"
3	Sealing air	M5
4	Taper cleaning	G 1/8"
7	Pneumatic system for tool change	G 1/8"
8	Cylinder vent Sound absorber (may only be removed if necessary!)	G 1/8"

5.2 Electrical connection

The HF spindle may only be operated with a frequency converter (FC).

- Check whether the current, voltage, and frequency data of the HF spindle match the raw data for the frequency converter.
- Use a motor supply line that is as short as possible.
- Adjust the speed of the HF spindle using the FC.
- Refer to the frequency converter manual for further information.

The FC detects the following operating states of the HF spindle, depending on the version:

- HF spindle rotating.
- HF spindle too hot.
- HF spindle at a standstill, etc.

The FC forwards the operating states of the HF spindle to the machine controller.

5.3 Cooling

Liquid cooling keeps the HF spindle at a constant temperature during operation.

Note: Extension of the service life through heat dissipation.

Heat is produced during operation of the HF spindle. The temperature of the HF spindle should not exceed + 45° C as this shortens the service life of the bearing.

▶ Check the temperature of the HF spindle on the housing.

5.4 Sealing air

For guidelines on air quality, see "Air purity classes (ISO 8573-1) [▸ 25]" section.

The sealing air prevents foreign bodies such as chips and liquids (e.g. emulsions) from entering the HF spindle.

- Check that air escapes at the front between the housing and the rotating parts of the HF spindle.

5.5 Taper cleaning

Taper cleaning prevents chips and liquids from entering the shaft during a tool change and causing contamination and damage to the inner taper and the clamping system.

The taper cleaning is integrated in the pneumatics system for the tool change. This means that no additional connections are required.

5.6 Pneumatic tool change

For guidelines on air quality, see "Air purity classes (ISO 8573-1) [▸ 25]" section.

The tool change or tool taper change is performed pneumatically.

During this, a mechanism is operated inside the HF spindle which clamps, releases, or ejects the tool taper or collet.

5.7 Cylinder vent

The cylinder takes in air when clamping the taper/tool. This air must be clean and dry.

Only if necessary:

- Remove the sound absorber.
- Fit the relevant hose fitting in place of the sound absorber.
- Fit the relevant hose to the hose fitting.
- Select the length of the hose so that its free end protrudes out of the hose fitting far enough that no dirt or moisture can be taken into the hose.

6 Technical Specifications

Bearings

Hybrid ball bearing (pcs)	2
Lifetime lubricated	maintenance free

Power values
Liquid cooled

	Pmax./5s	S6-60%	S1-100%	
Rated power	3,5	2,6	2,3	[kW]
Torque	1,24	0,96	0,82	[Nm]
Voltage	200	200	200	[V]
Current	14	10	9,5	[A]

Motor data

Motor technology	3-phase asynchronous drive (no brushes or sensors)
Frequency	667 Hz
Motor poles (pairs)	1
Rated rotation speed	40.000 rpm
Acceleration/braking value Per second	10 000 rpm (other values by consultation)

Characteristics

Speed sensor	Differential magneto resistor (TTL) Number of signals = 6
Motor protection	PTC 130°C
Housing	Aluminium
Housing diameter	100 mm
T-slots	DIN 650-8
Spindle holder integrated	
Cooling	Liquid cooled
Ambient temperature	+ 10°C … + 45°C
Sealing air	
Protection category (sealing air turned on)	IP54
Taper cleaning	
Tool change	Pneumatic taper change
Tool Holder	HSK-E 25
Tool change monitoring	inductive
1 position	clamped
Clamping range up to	10 mm
Clockwise and anticlockwise	

Coupler plug	Y-TEC 9-pin (motor phases) 12-pin (sensors)
Weight	~ 7 kg
Inner taper run out	< 2 µ
Axial run-out	< 2 µ

6.1 Dimensions

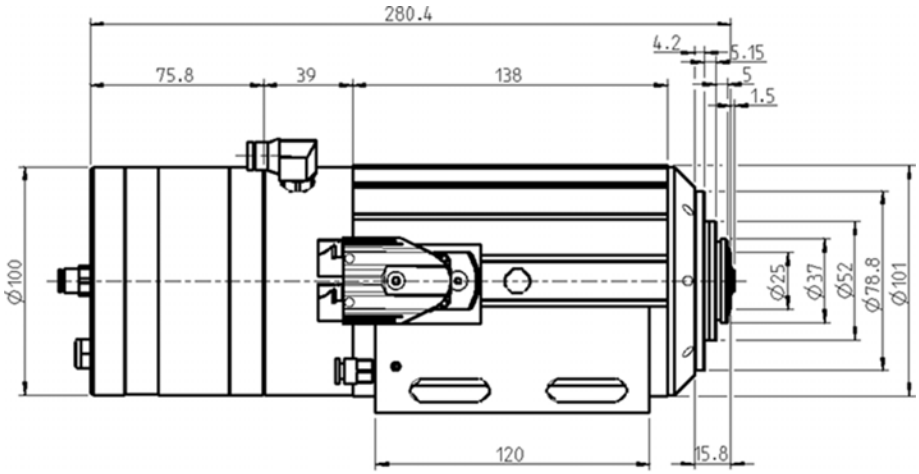

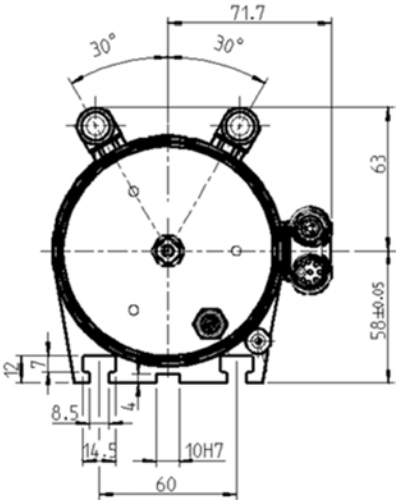

6.2 Technical data sheet (KL 3514, AC motor)

The power values (S1, S6, S2) are valid for sinusoidal currents and voltages.

The power values of the HF spindle are dependent on the frequency converter used and may vary from the indicated values.

Motor type	ACM 70/40/50-2
Rated power	2,3 kW
Rated rotation speed	40.000 rpm
Cooling	Liquid cooled
Motor protection	PTC 130°C
Winding resistance	0,63 Ω

Measured values: S1-100%

Rated rotation speed	5 000	10 000	15 000	20 000	25 000	30 000	35 000	40 000	rpm
Speed	4 440	9 080	14 190	18 990	24 065	28 660	33 895	38 705	rpm
Frequency	83	167	250	333	417	500	583	667	Hz
Rated power	0,383	0,767	1,15	1,533	1,917	2,3	2,3	2,3	kW
Torque	0,82	0,81	0,77	0,77	0,76	0,77	0,65	0,57	Nm
Voltage	50	75	110	133	167	200	200	200	V
Current	9,5	9,5	9,5	9,5	9,5	9,5	9,5	9,5	A
cos φ	0,76	0,91	0,89	0,91	0,91	0,9	0,91	0,91	

Measured values: S6-60%

Rated rotation speed	5 000	10 000	15 000	20 000	25 000	30 000	35 000	40 000	rpm
Speed	4 310	8 964	14 040	18 910	23 900	28 915	33 695	38 645	rpm
Frequency	83	167	250	333	417	500	583	667	Hz
Rated power	0,433	0,867	1,3	1,733	2,167	2,6	2,6	2,6	kW
Torque	0,96	0,93	0,89	0,89	0,87	0,86	0,74	0,64	Nm
Voltage	50	75	110	133	167	200	200	200	V
Current	10	10	10	10	10	10	10	10	A
cos φ	0,83	0,92	0,91	0,92	0,91	0,91	0,91	0,91	

Measured values: S2-Pmax./5 s

Rated rotation speed	5 000	10 000	15 000	20 000	25 000	30 000	35 000	40 000	rpm
Speed	4 260	8 535	13 470	18 060	23 290	28 360	32 955	38 090	rpm
Frequency	83	167	250	333	417	500	583	667	Hz
Rated power	0,45	0,95	1,75	2,333	2,917	3,5	3,5	3	kW
Torque	1,01	1,06	1,24	1,23	1,2	1,18	1,01	0,75	Nm
Voltage	50	75	110	133	167	200	200	200	V
Current	11	12	14	14	14	14	14	12	A
cos φ	0,85	0,93	0,91	0,9	0,9	0,9	0,9	0,9	

Note on operation with static frequency converters:

For operation with a frequency converter, the effective fundamental voltage must correspond to the specified motor voltage.

The measured currents may be greater than the specified values due to the harmonic content.

6.2.1 Performance Diagram

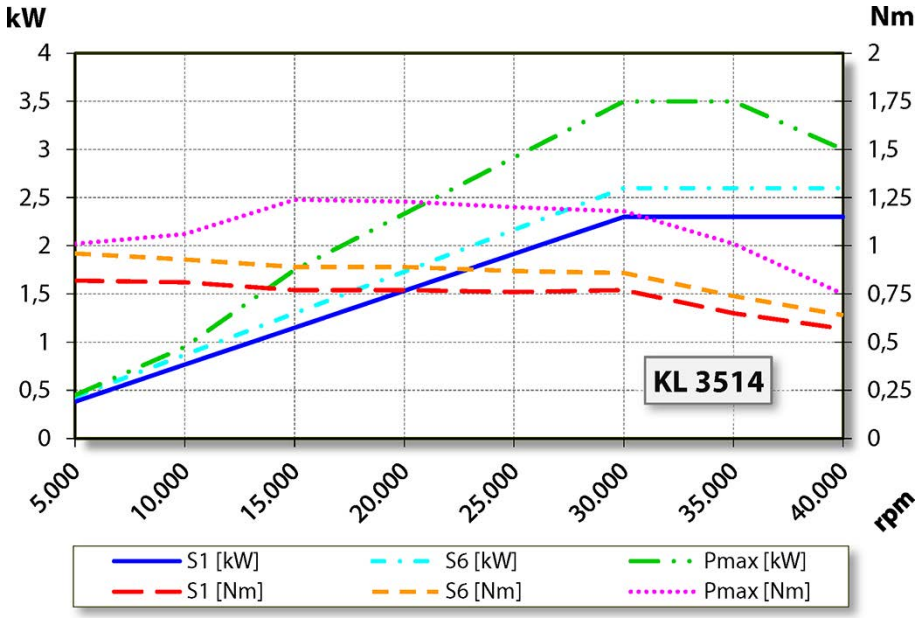

6.3 Wiring diagram

Note: Do not change the ex-works configuration.

Any change may cause overvoltage on the electrical components (e.g. PTC, differential magneto resistor).

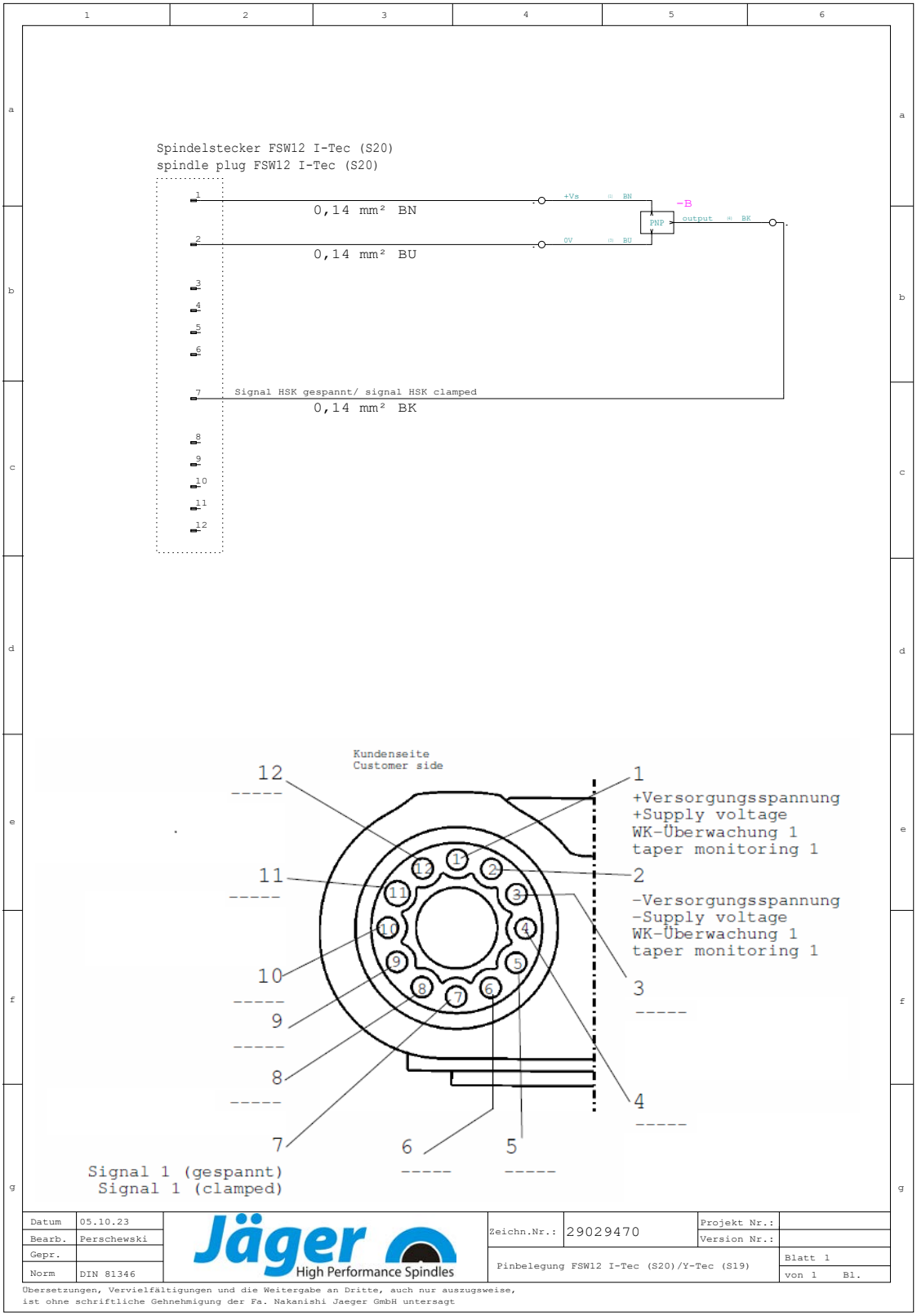

Spindelstecker FSW9 I-Tec (S21)
spindle plug FSW9 I-Tec (S21)

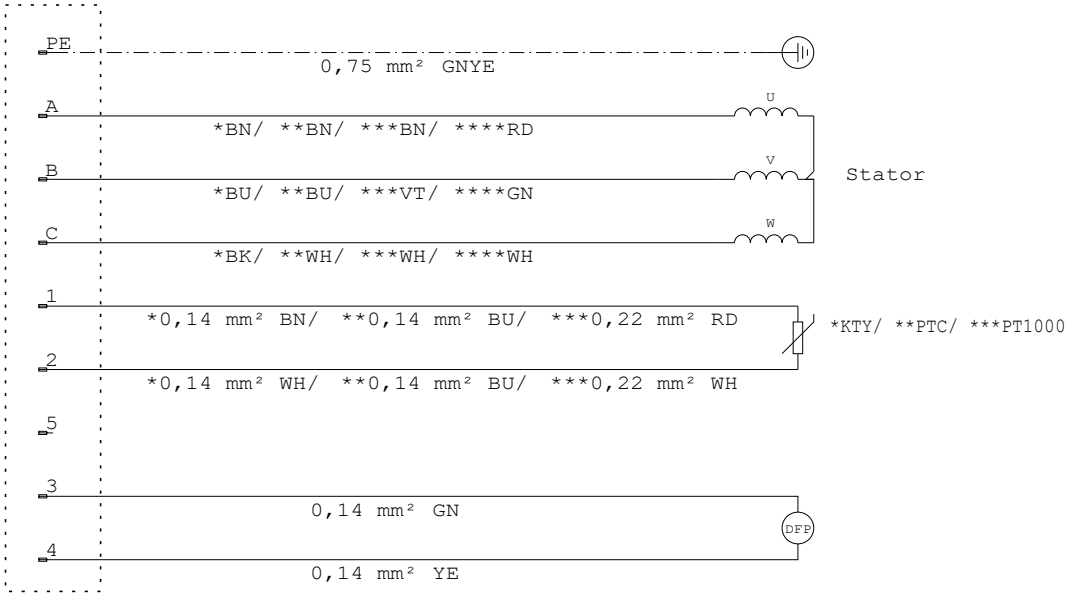

* Aderleitung braun (U), blau (V), schwarz (W) bei Jäger Stator 70/40-2pol
* core cable brown (U), blue (V), black (W) at Jäger stator 70/40-2pol

** Aderleitung braun (U), blau (V), weiß (W) bei Jäger Stator 3/7-4pol
** core cable brown (U), blue (V), white (W) at Jäger stator 3/7-4pol

*** Aderleitung braun (U), violett (V), weiß (W) bei Jäger Stator 4/7-2pol
*** core cable brown (U), violett (V), white (W) at Jäger stator 4/7-2pol

**** Aderleitung rot (U), grün (V), weiß (W) bei Jäger Stator 2/4-2pol
**** core cable red (U), green (V), white (W) at Jäger stator 2/4-2pol

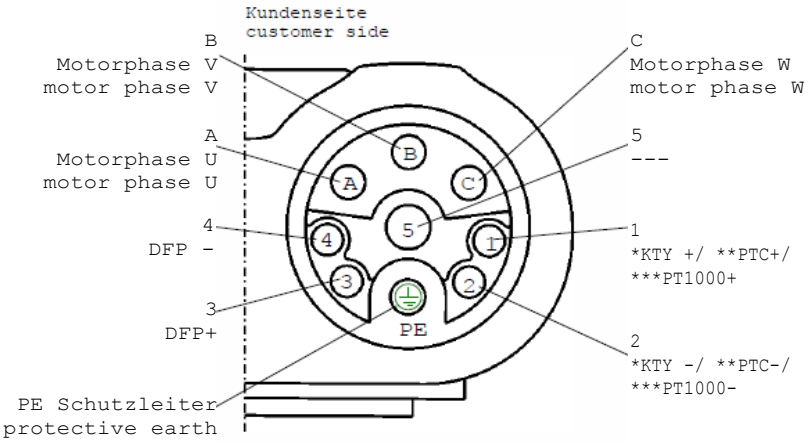

Datum	09.05.17	Jäger High Performance Spindles	Zeichn.Nr.: 29029171	Projekt Nr.:	
Bearb.	Perschewski			Version Nr.:	
Gepr.			Pinbelegung FSW9 I-Tec (S21)/ Y-Tec (S19)	Blatt 1	
Norm	DIN 81346			von 1 Bl.	

Übersetzungen, Vervielfältigungen und die Weitergabe an Dritte, auch nur auszugsweise,
ist ohne schriftliche Gehnehmigung der Fa. Nakanishi Jaeger GmbH untersagt

6.4 Motor protection PTC 130°C

PTC thermistor with protective insulation

Characteristic curves for rated response temperatures 90°C to 160°C in accordance with DIN VDE V 0898-1-401.

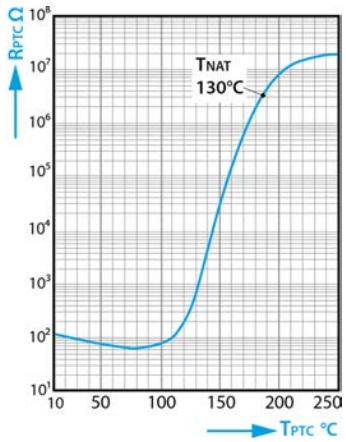

Positive temperature coefficient thermistor resistance (R_{PTC}) according to the positive temperature coefficient thermistor temperature (T_{PTC}) (small-signal resistance).

Technical Specifications

Type		M135	
Max. operating voltage	(T_A = 0 … 40°C)	V_{max}	30 V
Max. measuring voltage	(T_A – 25 K … T_{NAT} + 15 K)	$V_{Meas, max}$	7.5 V
Nominal resistance	(V_{PTC} ≤ 2.5 V)	RN	≤ 250 Ω
Insulation test voltage		V_{is}	3 kV~
Response time		t_a	< 2.5 s
Operating temperature range	(V=0)	T_{op}	-25/+180°C

Resistance values

T_{NAT} ±ΔT	R (T_{NAT} – ΔT) (V_{PTC} ≤ 2.5 V)	R (T_{NAT} – ΔT) (V_{PTC} ≤ 2.5 V)	R (T_{NAT} + 15 K) (V_{PTC} ≤ 7.5 V)	R (T_{NAT} + 23 K) (V_{PTC} ≤ 2.5 V)
130 ±5°C	≤ 550 Ω	≥ 1330 Ω	≥ 4 kΩ	----

6.5 Tool change monitoring

Tool taper monitoring indicates the readiness status of the HF spindle to the operator and forwards the corresponding signal to the machine controller.

❑ Tool taper monitoring using inductive proximity switch.

Signals

Tool clamped
HF spindle
↓
Ready to operate

Operating voltage range:
10-30 VDC (UL – Class 2)
Switching distance: Sn 2.0 mm
Short-circuit and reverse-polarity resistant.

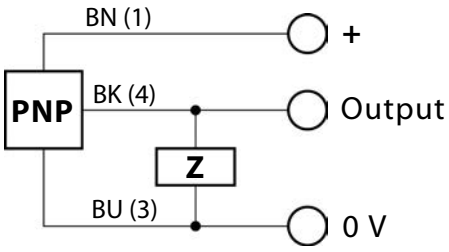

BN = brown
BK = black
BU = blue
NO = Normally ope

6.6 Speed sensor (digital differential magneto resistor)

Trouble-free evaluation requires good wiring.

- Use twisted and shielded cables.
- Connect the HF spindle based on the connection example shown below.

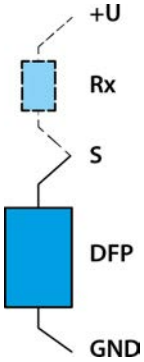

DFP = digital differential magneto resistor
S = signal

Note: Resistor (Rx).

If the resistor (Rx*) is already integrated in the evaluation unit (FC):

▶ Only connect signal and ground.

Supply voltage (U)	Rx (*)	Signal (**)
+ 8 V	220 Ω	1000 mV
+ 8 V	450 Ω	2000 mV
+ 12 V	220 Ω	1000 mV
+ 12 V	680 Ω	3000 mV
+ 15 V	220 Ω	1000 mV
+ 15 V	680 Ω	3000 mV
+ 24 V	220 Ω	1000 mV
+ 24 V	680 Ω	3000 mV

*Unnecessary if a resistor is integrated in the evaluation unit (frequency converter, etc.).

**Values may differ by ±20% depending on the measuring method.

6.7 Air-borne noise emissions

CAUTION: Noise has an impact on health.

▶ Only operate the HF spindle if you are wearing hearing protection.

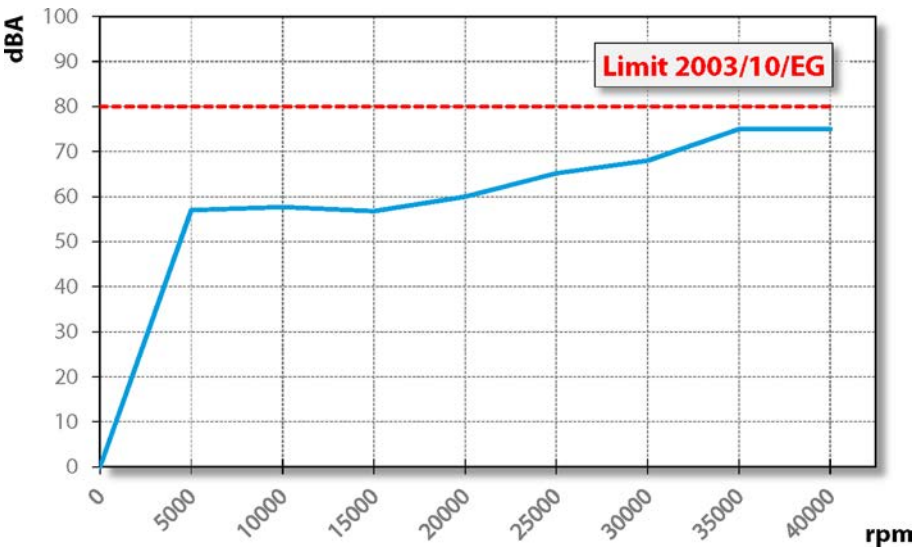

7 Operating location

DANGER: Due to flying parts.

If the HF spindle is incorrectly attached, it may come loose during operation and be flung away by the forces that occur.

▶ Clamp the HF spindle firmly.

WARNING: Risk of injury due to flying parts.

The HF spindle operates at high speeds which may cause chips to fly out with great force.

▶ Never remove the protective devices of the machine or system.

▶ Always wear protective goggles during work.

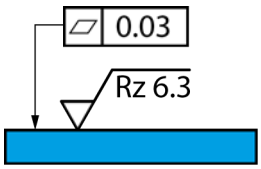

Example of design: Mounting surface

Note the following points before installing the HF spindle:

- Make sure that the correct T-slot clamping system for the HF spindle is fitted in the machine.
- Check the connecting hoses for damage.
- Check the connecting cables for damage.
- Only use undamaged hoses and cables.
- Do not allow the HF spindle to run in the vicinity of a heat source.

8 Installation

Before installation:

- Check the HF spindle for damage and ensure that it is complete.

If the HF spindle has been stored for a long period:

- Carry out all steps in the Commissioning after storage section.

8.1 Installing the HF spindle

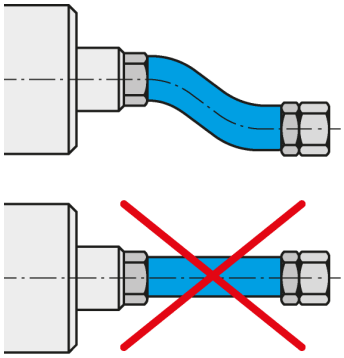

Connect media and cables with a flexible connection.

Complete the following steps in sequence to install the HF spindle:

- Remove the sealing plugs that protect the connections against damage and contamination during transportation.
- Instead of these sealing plugs, install the appropriate hose fittings.
- Install the corresponding hoses in the hose fittings
- Make sure that the connections are flexible and free of strain.
- Seal all connections for compressed air axially in relation to the tightening direction.
- Seal all connections for cooling water axially in relation to the tightening direction.
- If the HF spindle is equipped with sealing air:
  - Make sure that no air flow can occur in the bearing area.
  - Always use sealed cable boxes when connecting electrical lines.
- Mount the HF spindle on the machine.
- Connect the hoses to the connection of the respective media.
- Connect the connector of the operating connection lines to the relevant connection of the HF spindle and to the frequency converter.
- Lock the connectors.

8.2 Diameter of media supply line

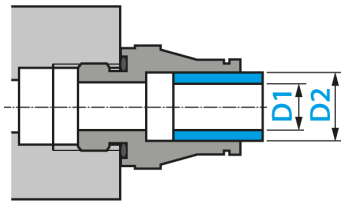

➲ The nominal size of the media supply lines can be found in the following table:

DN	Medium	D1		D2	
2.8	Compressed air	2.8 mm	$^{7}/_{64}$"	4 mm	$^{5}/_{32}$"
4	Compressed air	4 mm	$^{5}/_{32}$"	6 mm	$^{15}/_{64}$"
6	Compressed air	6 mm	$^{15}/_{64}$"	8 mm	$^{5}/_{16}$"
5.5	Cooling water	5.5 mm	$^{7}/_{32}$"	8 mm	$^{5}/_{16}$"
7	Cooling water	7 mm	$^{9}/_{32}$"	10 mm	$^{25}/_{64}$"

8.3 Cooling water

8.3.1 Quality of cooling water

Distilled water causes immediate corrosion on bare parts, which is often unnoticeable at first, but later leads to serious corrosion damage.

➲ Do not use pure or distilled water.

Deposits in cooling channels due to unsuitable cooling water prevent the dissipation of heat.

➲ Use cooling water with the following properties:

Drinking water	according to 98/83/EC
Hardness	1-15°dH
PH value	7-9
Additive (corrosion protection)	20% Antifrogen N

8.3.2 Setting the cooling

➲ Observe the following values for liquid cooling:

Hose diameter (*)	Min. DN 5.5
Feed temperature	Min. 20°C
Volumetric flow	Min. 1.5 l/min
Return temperature	Max. 40°C

(*) Use cooling hoses that are impermeable to UV light.

8.4 Compressed air

8.4.1 Air purity classes (ISO 8573-1)

Solid impurities	**Class 3** Filter grade at least 5 µm for solids
Water content	**Class 4** Max. pressure dew point +3 °C
Total oil content	**Class 3** Max. oil content 1 mg/m³

8.4.2 Setting the sealing air

For guidelines on air quality, see "Air purity classes (ISO 8573-1) [▸ 25]" section.

The adjustment value for the sealing air depends on the hose diameter and length.

- Hose diameter: DN 2.8
- The setting value can be found in the following diagram.
- To ensure effective control, turn on the sealing air and cooling when turning on the machine. This protects the HF spindle even when it is stationary.

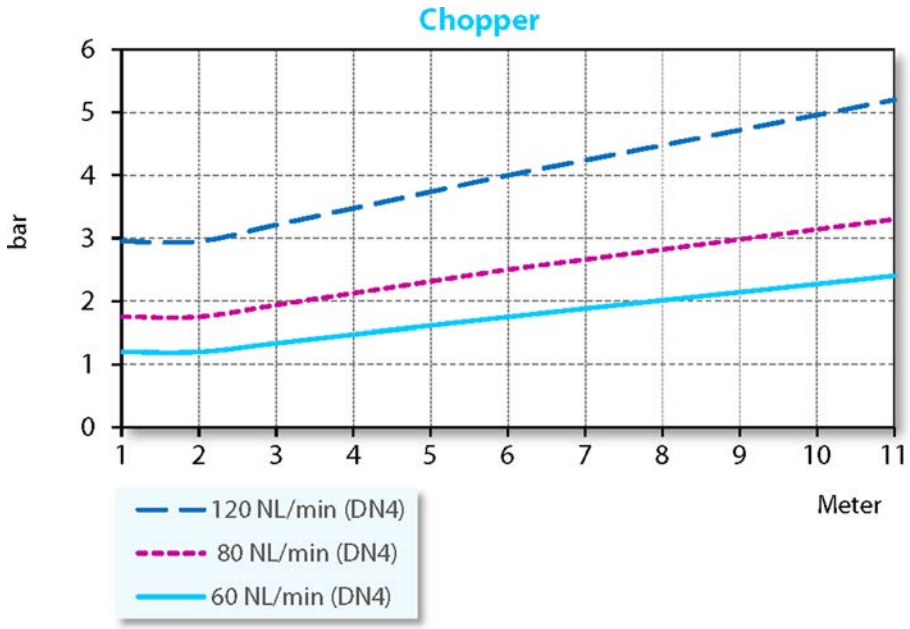

Lowest sealing air supply	Dry machining
Medium sealing air supply	Machining with spray water
Highest sealing air supply	Machining with hose water

8.4.3 Setting values

For guidelines on air quality, see "Air purity classes (ISO 8573-1) [▸ 25]" section.

➲ Keep to the following values:

Pneumatic system for tool change	≥ 6,0 bar

9 Commissioning

DANGER: Due to flying parts.

If the speed is selected incorrectly, the HF spindle or the tool may be destroyed and their fragments may be flung out.

▶ Note the maximum speed for the selected tool.

▶ Note the maximum speed for the HF spindle.

▶ The maximum permissible speed of the HF spindle for commissioning / processing is always the **lowest** specified speed.

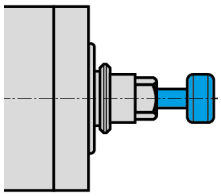

Example of design: Inserting the shank

Note: Ensure functionality.

▶ Never operate the HF spindle without a clamped tool shank.

If no tool shank is clamped:

❑ The clamping system is damaged by the centrifugal forces.

❑ The clamping system is shifted.

❑ The balance of the HF spindle is affected.

❑ The bearing is damaged.

➲ Turn the shaft of the spindle at least ten times by hand.

➲ Before storing and before commissioning only clean the cooling duct with compressed air.

9.1 Running-in schedule

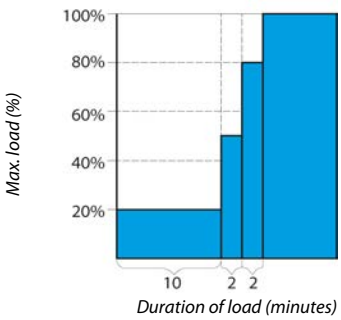

➲ Put the HF spindle into operation with a clamped tool (without machining) for approx. 10 minutes.

➲ The speed in this case should be no more than 20% of the maximum permissible speed for the HF spindle.

↳ See definition: Max. permissible speed

➲ Allow the HF spindle to run for approx. 2 minutes at a maximum of 50% of the maximum permissible speed.

➲ Operate the HF spindle for approx. 2 more minutes at a maximum of 80% of the maximum permissible speed.

The HF spindle is now ready for operation.

9.2 Daily start-up

Proceed as follows to preheat the grease lubrication of the bearing and to protect it:

- Operate the HF spindle with a clamped tool (without machining).
  - Approx. 2 minutes.
  - At maximum 50 % of the maximum permissible speed.
    (See Commissioning [▸ 26] section)

This brings the HF spindle to its operating temperature.

9.3 Shutdown signal

Use the option on the frequency converter of detecting the shutdown signal from the shaft and forwarding this to the machine controller for evaluation.

9.4 Commissioning after storage

- Do not put the HF spindle into operation until its temperature has adjusted from the temperature of the storage location to the temperature of the usage location.
  - The temperature difference between the HF spindle and the usage location should not exceed 10°C.
- Carry out all steps in the "Maintenance [▸ 32]" section.
- Operate the HF spindle at a maximum of 50 % of the max. permissible speed for approx. 5 minutes.
  - See Commissioning [▸ 26] section
- Operate the HF spindle for approx. 2 more minutes at a maximum of 80 % of the maximum permissible speed.

This preheats the grease lubrication of the bearing and protects it.

10 Tool change

CAUTION: Danger of being drawn in by rotating shaft.

If the shaft is still rotating, fingers and hands may be drawn in and crushed.

▶ Only change the tool if the shaft is at a standstill.

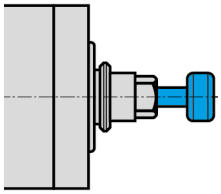

Example of design: Inserting the shank

Note: Ensure functionality.

▶ Never operate the HF spindle without a clamped tool shank.

If no tool shank is clamped:

- ❑ The clamping system is damaged by the centrifugal forces.
- ❑ The clamping system is shifted.
- ❑ The balance of the HF spindle is affected.
- ❑ The bearing is damaged.

10.1 Clockwise and counter-clockwise

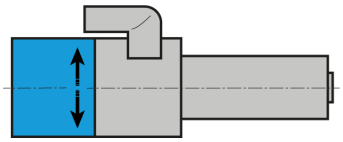

Sample illustration: Direction of rotation indication

The HF spindle clamping system is designed for clockwise and counter-clockwise rotation.

- ➲ Only use tools with the correct direction of rotation for the HF spindle.
- ➲ Only use tool mounts with the correct HF spindle direction of rotation.
- ➲ Set the HF spindle direction of rotation on the FC to match the direction of rotation of the tool / tool mount used.

10.2 Pneumatic taper change

DANGER: Due to flying parts.

The taper cleaning could build up air pressure in the hollow shank taper during the tool taper change. This air pressure flings out the hollow shank taper in the case of sudden release.

▶ Ensure that the ventilation hole of the shaft is open.

↳ Contact **Nakanishi Jaeger GmbH** service.

Tip: Ensure concentric run-out quality.

▶ Keep collet, clamping nut, contact surface, shaft, tool taper, and tool mount clean at all times.

▶ Check the tool taper mount.

It must be free of damage and clean when switching to the HF spindle.

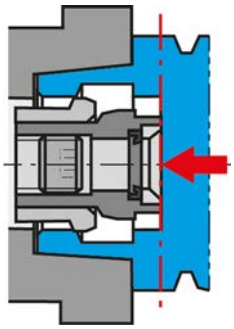

Insert the tool up to the contact surface of the clamping taper.

- Make sure that the shaft of the HF spindle has come to an absolute standstill.
- Switch on the compressed air for the tool change.
- Remove the tool.
- Clean the inner taper of the tool mount and the inner taper of the shaft with the felt cleaning taper.
- Insert the tool.
  - ↳ Insert the tool up to the contact surface of the clamping taper.
- Switch off the compressed air for the tool change.
- Wait for 1-2 seconds after the tool change.
- Start the HF spindle.

10.2.1 Automatic hollow shank taper tool clamp

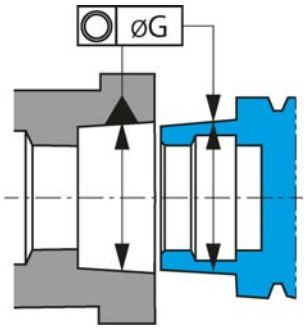

Coaxiality tolerance

We recommend the following values:

- Coaxiality tolerance when changing the tool.
  - ↳ Coaxiality (ØG): 0,6 mm
- Contact force on clamping taper.
  - ↳ Maximum: 100 N

10.3 Tool changing station (optional accessory)

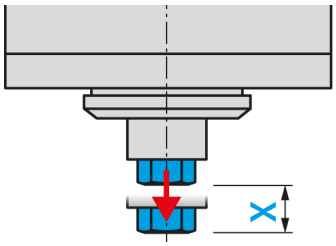

Example of design: Ejection travel

During a tool change, the HF spindle moves into the changing station with the clamped tool.

➲ Note the following values when producing the changing station in order to compensate for the ejection travel (X):

Spring loaded	X = 2 - 5 mm
Spring force	40 - 80 N

10.3.1 pneumatic taper change

During a tool change, the tool mount is pressed out of the shaft by the cylinder.

10.3.2 Installing the changing station

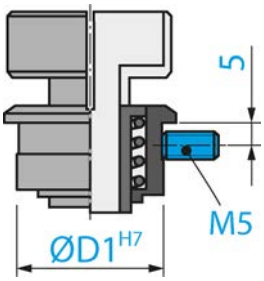

Proceed as follows to install the changing station:

➲ Drill a hole with a suitable diameter (Ø D1 H7) for the tool mount.

➲ Add an M5 thread.

➲ Insert the changing station into the hole.

➲ Secure the changing station using the threaded spindle (M5).

10.3.3 Maintenance

Before commencing work:

➲ Check that all surfaces are thoroughly cleaned and free of dust, grease, coolant, machining residues, and metal particles.

➲ Check that the changing station is free of damage.

11 Tools for high speed cutting

DANGER: Due to flying parts.

If the wrong direction of rotation is used, the tool is damaged when load is applied. The centrifugal forces cause the broken part to be flung out.

- ▶ Only use tools with the correct direction of rotation for the HF spindle.

DANGER: Due to flying parts.

If the speed is selected incorrectly, the HF spindle or the tool may be destroyed and their fragments may be flung out.

- ▶ Note the maximum speed for the selected tool.
- ▶ Note the maximum speed for the HF spindle.
- ▶ The maximum permissible speed of the HF spindle for commissioning / processing is always the **lowest** specified speed.

- Only use tools that are technically sound.
- Only use tools with a tool shank diameter that corresponds to the inner diameter of the collet. For example, do not use shanks with a diameter of 3 mm in collets for 1/8" (=3.175 mm).
  - Also see the Technical Specifications [▸ 14] section
- Only use tool shanks with a diameter tolerance of h6.
- Do not use tool shanks with a clamping surface (e.g. Weldon).
- Only use a balanced tool.
  - DIN ISO 1940, balance grade 2,5 .

12 Maintenance

Only specialist personnel may perform maintenance on the spindle.

The HF spindle must be shut down before any maintenance work.

- Make sure that the shaft of the HF spindle has come to an absolute standstill.
- Before carrying out any work, read the corresponding section of the manual carefully again.
- Observe the manual of the machine in which the HF spindle is installed.
- Observe all safety instructions and safety rules.

12.1 Ball bearings

Note: Foreign matter reduces the service life.

The HF spindle bearings have lifetime grease lubrication. This means that they do not require maintenance.

- Do not lubricate the ball bearings.
- Do not apply grease, oil, or cleaning agents to the openings of the HF spindle.

12.2 Daily cleaning

To ensure that the HF spindle functions safely and accurately, all contact surfaces of the HF spindle, the mount for the HF spindle, the tool mount, and the tool holder must be clean.

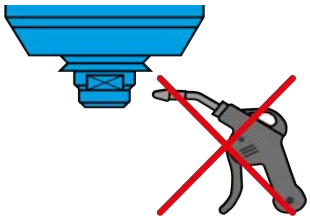

Note: Foreign matter reduces the service life.

- Do not use compressed air to clean the HF spindle.
- Do not use ultrasonic cleaning on the HF spindle.
- Do not use steam jets to clean the HF spindle.

This could cause contamination to enter the bearing area.

12.2.1 Before commencing work

- Check that all surfaces are thoroughly cleaned and free of dust, grease, coolant, machining residues, and metal particles.
- Check that the HF spindle is free of damage.
- If the HF spindle is equipped with sealing air, always switch this on during cleaning.
- Only use a clean, soft cloth or a clean, soft brush for cleaning.

12.2.2 With every tool change

- Ensure that the tool mount and tool shank are clean.
  - Remove any soiling.

12.2.3 Every time the clamping device is changed

- Clean the inner taper of the HF spindle shaft. The inner taper must be free of chips and contamination.
- Clean the tool taper.

12.3 In the case of storage

If the HF spindle is not required for a prolonged period of time:

- Before storing and before commissioning only clean the cooling duct with compressed air.
- Remove all coolant residues.
- Store the HF spindle in horizontal position.
- Store the HF spindle so that it is protected from moisture, dust, and other environmental influences.
- Note the following storage conditions.

Temperature of storage location	+10°C … + 45° C
Relative humidity	< 50 %

12.4 Weekly maintenance

Visual inspection of the clamping system for:

- Damage
- Function
- Lubrication
  - To achieve a constant clamping force, the functional surface of the clamping system must be re-lubricated.
  - We recommend METAFLUX 70-81 glide metal spray.
  - Mixing of different greases is not permitted.

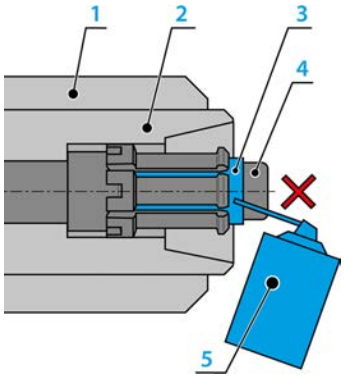

1	HF spindle
2	Shaft
3	Function surface
4	The clamping system
5	Glide metal spray (optional accessory)

12.5 Monthly maintenance

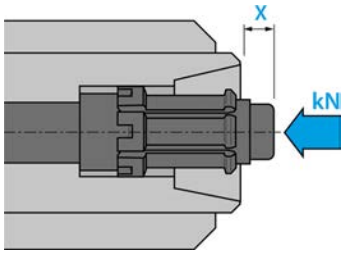

- Turn the shaft of the HF spindle at least ten times by hand every four weeks.
- Check dimension X of clamping system
  - Target dimension: 6,3 ± 0,1 mm
- Check the clamping force of the clamping system
  - Setpoint: 3,2 - 4,5 kN

If the values are incorrect, send the HF spindle to **Nakanishi Jaeger GmbH** or to a certified service partner for inspection and maintenance.

12.6 Long periods of storage

- Turn the shaft of the HF spindle at least ten times by hand every three months.
- Then put the HF spindle into operation with a tool inserted for approx. 10 minutes.
  - The speed should be no more than 20 % of the maximum permissible speed for the HF spindle. (See Commissioning [▸ 26] section)

12.7 Maximum storage time

The maximum storage time is 2 years.

- Make sure that all information in the "Long periods of storage [▸ 34]" section is adhered to. This is the only way in which to maintain the functionality of the HF spindle.

13 Dismantling

Proceed as follows to remove the HF spindle:

- Completely disconnect the power supply.
- Completely disconnect the media supply (air and liquid).
- Make sure that the shaft of the HF spindle has come to an absolute standstill.
- Remove all connections from the HF spindle.
- Empty the cooling duct of the HF spindle.
- Remove the HF spindle from the machine.

13.1 Disposal and environmental protection

More than 90% of the materials used in the HF spindle can be recycled (aluminum, stainless steel, steel, copper, etc.)

The HF spindle may not be disposed of with normal domestic waste.

- Remove all non-recyclable materials.
- Dispose of the HF spindle as scrap at an approved recycling facility.
- Follow all rules of the responsible administrative bodies.
- Do not discharge coolants into wastewater.
- Dispose of cooling media in accordance with local regulations.

If the HF spindle cannot be dismantled, send the HF spindle to **Nakanishi Jaeger GmbH**. **Nakanishi Jaeger GmbH** shall not assume the costs incurred for shipment and the fees for the recycling facilities.

14 Service and repairs

DANGER: Electric shock.

Electric shock can lead to severe burns and life-threatening injuries.

Take measures to prevent hazards caused by electrical energy (for details refer e.g. to the regulations issued by the VDE and the local energy supply companies).

▶ Before commencing work, switch off the power supply of the HF spindle.

Note: Damage due to electrostatic discharge.

Do not touch the electrostatic-sensitive components of the HF spindle.

14.1 Service partners

Only certified service partners may open and repair the spindle. Failure to comply with this voids any warranty claims and compensation claims for damages.

- The list of partners can be found on the following website.

https://www.nakanishi-jaeger.com/en/contact/service-partners

14.2 Malfunctions

The list below can be used to quickly investigate and eliminate faults.

HF spindle not rotating

Cause	Troubleshooting
No power supply	❑ Check the frequency converter. ❑ Check the machine. ❑ Check all electrical connections. ❑ Check all wires in the motor cable. ❑ Activate the Start/Reset button.
Thermal protection has been activated	❑ Wait until the HF spindle has cooled down. ❑ Check the frequency converter for error messages. If no messages are illuminated, start the frequency converter. (See also “Spindle becomes hot [▸ 36]”.)
Frequency converter has shut down	❑ Check the error messages in the frequency converter manual.
Tool change initiated	❑ Turn off the pneumatic system for the tool change.

HF spindle becomes hot

Cause	Troubleshooting
Insufficient cooling	❑ Check the power of the chiller. ❑ Check the water level of the chiller. ❑ Check the connections and the cooling hoses. ❑ Check the cooling circuit. ❑ Check the chiller for error messages.
Phase missing	❑ Check all wires in the motor cable for cable breaks.
Machining too heavy	❑ Check the rotational direction of the HF spindle. ❑ Check the rotational direction of the tool. ❑ Check the tool for damage. ❑ Reduce the machining load intensity.
Frequency converter incorrectly set	❑ Compare the values for the HF spindle with the set values on the frequency converter.

HF spindle becomes loud

Cause	Troubleshooting
Tool unsuitable	❑ Only use balanced tools. (Also see the "Tools for high speed cutting [▸ 31]" section.) ❑ Check the tool for damage. ❑ Replace damaged tool.
HF spindle is not clamped truly or is distorted	❑ Only use spindle holders from the original accessories or holders produced according to the tolerances specified by **Nakanishi Jaeger GmbH**.
Bearings damaged	❑ Contact **Nakanishi Jaeger GmbH** service.

No automatic tool change

Cause	Troubleshooting
Contamination	❑ Remove all contamination between the tool taper and shaft of the HF spindle. (Observe all points in the “Tool change [▸ 28]” and “Maintenance [▸ 32]” sections.)
Collet does not open	❑ Check the electrical connection of the cylinder. (Observe all points in the “Tool change [▸ 28]” and “Maintenance [▸ 32]” sections.)

Sensor does not send any signals

Cause	Troubleshooting
No connection to sensor	❑ Check the lines and connections.
Incorrect tool position	❑ Check whether the tool is clamped correctly.
Incorrect tool insertion position	❑ Contact **Nakanishi Jaeger GmbH** service.

HF spindle vibrates/ oscillates

Cause	Troubleshooting
Tool unsuitable	❑ Only use balanced tools. (Also see the "Tools for high speed cutting [▸ 31]" section.) ❑ Check whether the tool is suitable for the application. ❑ Check the tool for damage. ❑ Replace damaged tool.
Contamination	❑ Remove all contamination between the tool taper and shaft of the HF spindle. (Observe all points in the “Tool change [▸ 28]” and “Maintenance [▸ 32]” sections.)
Frequency converter incorrectly set	❑ Compare the values for the HF spindle with the set values on the frequency converter.
Machining too heavy	❑ Reduce the machining load intensity.
Mounting screws are loose	❑ Tighten the screws securely.
HF spindle damaged	❑ Contact **Nakanishi Jaeger GmbH** service.

If the error is not rectified after checking all of the points, contact the relevant service partner.

- ➲ Request the accompanying note for the repair from the service partner.
- ➲ Check the manual of the machine.
- ➲ Contact the manufacturer of the machine.

15 Declaration of Incorporation

The safety instructions of the product documentation supplied must be observed.

Under the EC Machinery Directive

Nakanishi Jaeger GmbH

SF-Elektromaschinenbau

Siemensstr. 8

D-61239 Ober-Mörlen

Tel. +49 (0) 60029123 -0

hereby declare that the product,

Product	High Frequency Spindle
Type	Chopper 2300-40 HSK S19
Serial no.	See last page of manual

as far as possible from the supplied, complies with the essential requirements of the Machinery Directive 2006/42/EC.

Sections of the Machinery Directive have been applied: 1.1.1; 1.1.2; 1.1.5; 1.3.2; 1.3.4; 1.5.1; 1.5.2; 1.5.4; 1.5.5; 1.5.6; 1.5.8; 1.5.9; 1.6.4; 1.6.5; 1.7.1; 1.7.1.1; 1.7.2; 1.7.3; 1.7.4;

The incomplete machinery in its standard design complies furthermore with the following applicable regulations:

Applicable harmonized standards	DIN EN ISO 12100 Safety of machines

The machinery is incomplete and must not be put into service until the machinery into which it is to be incorporated has been declared in conformity with the provisions of the Machinery Directive 2006/42/EC and any other applicable regulations.

We at Nakanishi Jaeger GmbH agree to submit the special documents for incomplete machines to national authorities upon request.

The special technical documentation referred to in Annex VII, Part B, belonging to the machine has been created.

Person who is authorized to compile the documents listed in Annex VII, Part B:

Nakanishi Jaeger GmbH

Ober-Mörlen, 29.11.2024

Nakanishi Jaeger YouTube channel

Scan this QR code with any QR code scanner.

Nakanishi Jaeger GmbH
Siemensstraße 8
61239 Ober-Mörlen
GERMANY

☎ +49 (0)6002-9123-0
✉ sales@nakanishi-jaeger.com
www.nakanishi-jaeger.com

NSK America Corp.
1800 Global Parkway
Hoffman Estates, IL 60192
USA

☎ +1 (847) 843-7664
✉ info@nskamericacorp.com
www.nskamericacorp.com

Serial number			
Type	**Chopper 2300-40 HSK S19**		
Item no.	**11503007**		
Revision	04	Date	29.11.2024
Language	EN		

TÜVRheinland® CERT ISO 9001
Zertifikat: 01 100 059975